extreme environment lighting

Shadow

SKU: 114128

Color Output: White Dimming, Red Non Dimming, Blue Non Dimming

Finish: White

Shadow is versatile and tough, with incredible output greater than a 20W Halogen. Completely sealed (IP 67), Shadow is available with Lumitec's TTP technology, enabling dimming and color change with a standard 2-wire hookup and any on/off switch. Shadow is also compatible with 3rd party controllers including dimmers, flashers, and scene controllers. Choose between a wide range of available output colors and features, including dimming, color change, flashing, and synchronized flashing.

Voltage: 10-30vDC
12vDC Amps: 490mA
24vDC Amps: 250mA
Correlated Color Temperature: 5000
Color Rendering Index: 70+
Rated Watts: 6
Lumens (White): 372
Operating Temp (°C): -35 to +55 C
Operating Temp (°F): -31 to + 131 F

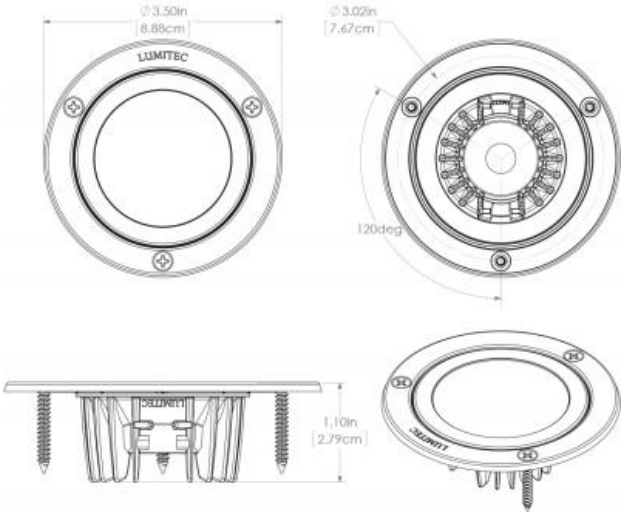

Dimensions: 3.50in (8.88cm) (W) x 3.50in (8.88cm) (H) x 1.10in (2.79cm) (D)

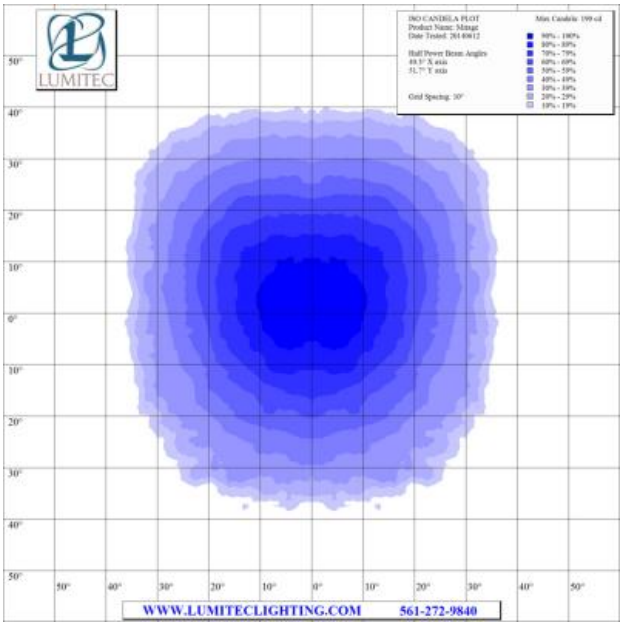

www.lumiteclighting.com | Phone: (561) 272-9840 | info@lumiteclighting.com

ISO LUX PLOT
Product Name: Mirage
Date Tested: 20140612

Target Distance: 10'
Grid Spacing: 2'

Max Lux at 10': 20 lx

- 90% - 100%
- 80% - 89%
- 70% - 79%
- 60% - 69%
- 50% - 59%
- 40% - 49%
- 30% - 39%
- 20% - 29%
- 10% - 19%

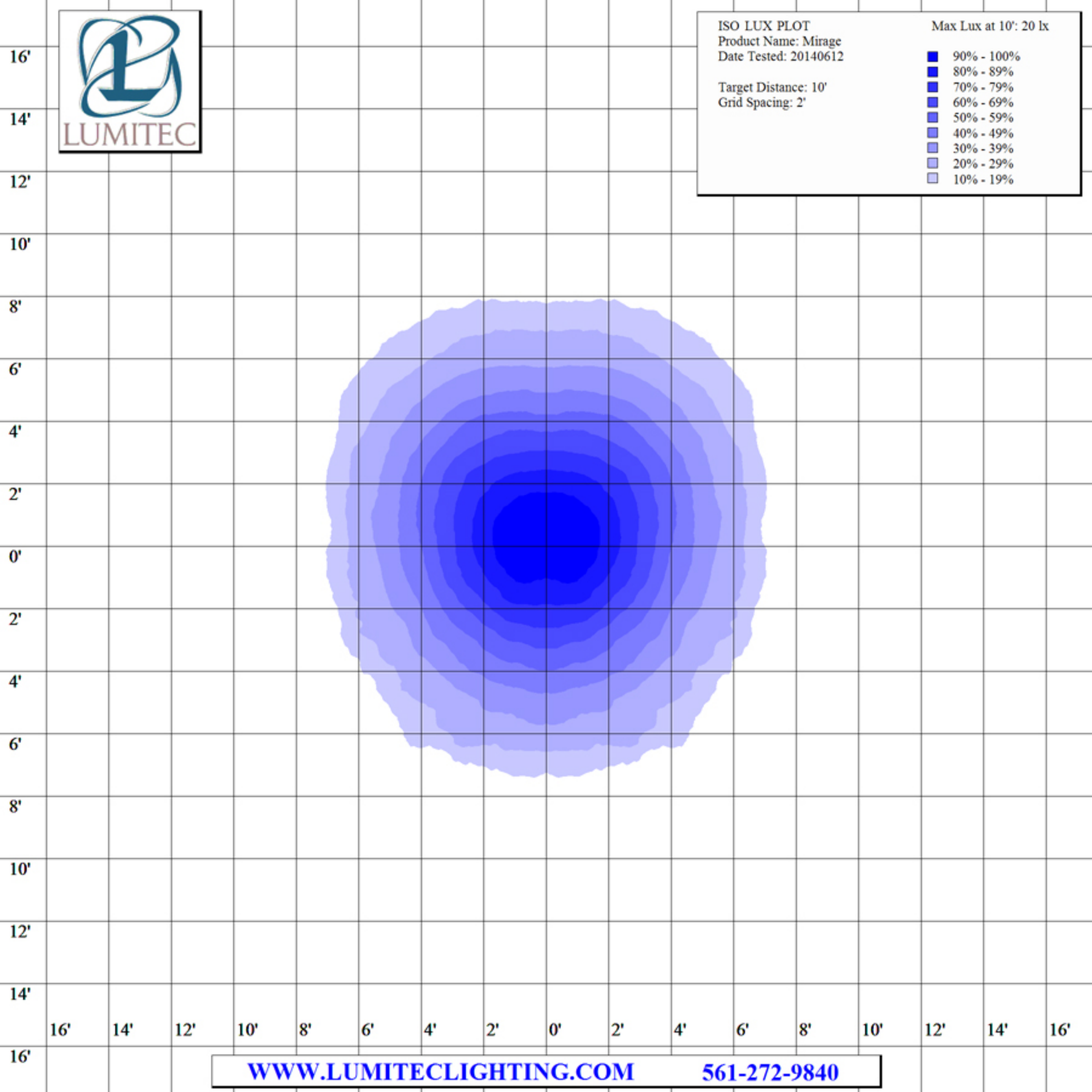

WWW.LUMITECLIGHTING.COM 561-272-9840