| REVISIONS | | | | |
|---|---|---|---|---|
| REV | DESCRIPTION | ECN | BY | DATE |
| 3 | CURRENT TRANSFORMER CHANGED FROM 288-042 TO 288-049 | | JOCHEZ TE | 10/18/04 |

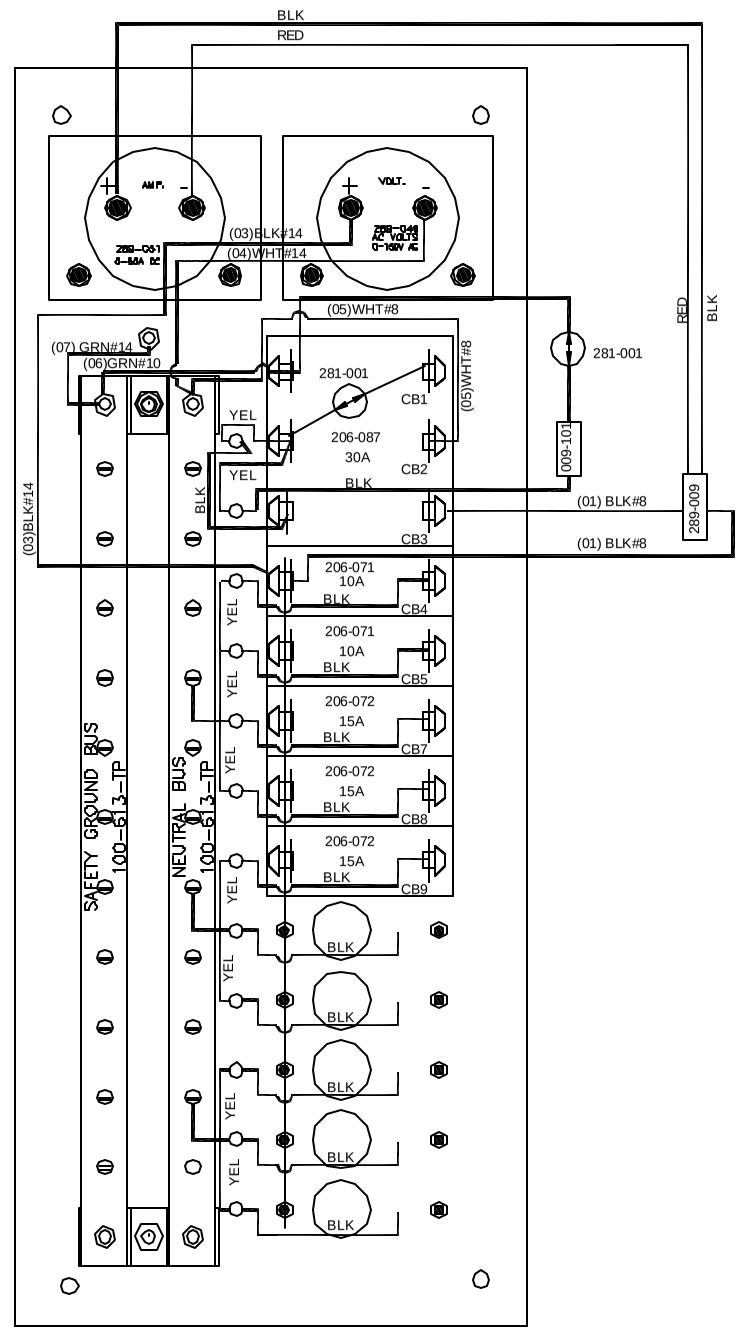


| | | | |
|---|---|---|---|
| [redacted] | IPANELTRONICS INCORPORATED | Paneltronics, Inc. 11960 N.W. 67th Court Hialeah Gardens, FL 33018 | |
| NOTES: | REAR VIEW 120VAC SYSTEM | | |
| MATERIAL: | | | |
| DRAWN BY: NA | DATE: 11/9/2000 | CUSTOMER: CATALOGUE | |
| SHEET: 2 of 3 | SCALE: 1:1 | SIZE: B | SERIES/MODEL: |
| DRAWING #: 9972320 | REV: 5 | | |