Audible Alarm Wiring Diagram

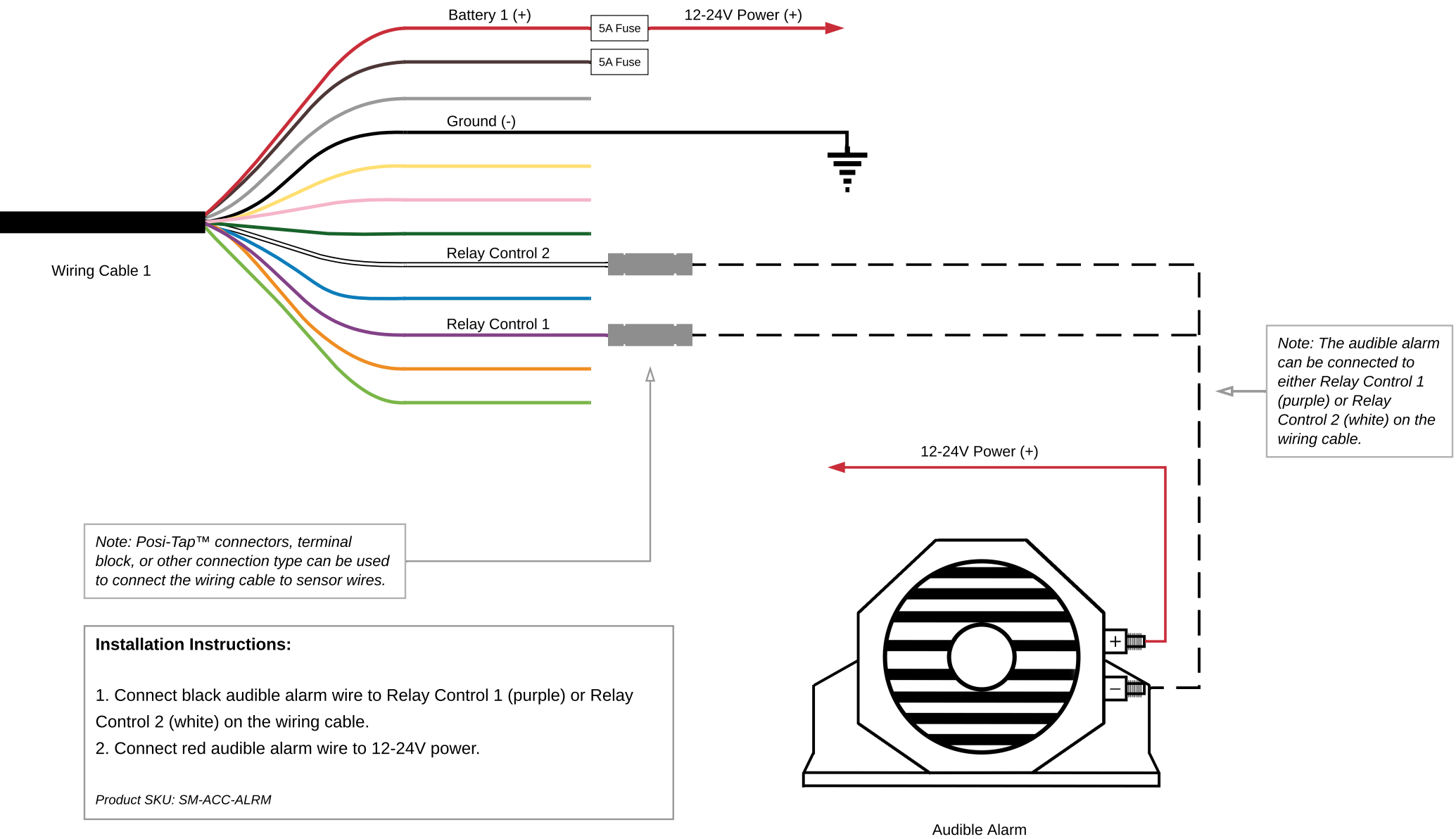

Installation Instructions:

1. Connect black audible alarm wire to Relay Control 1 (purple) or Relay Control 2 (white) on the wiring cable.
2. Connect red audible alarm wire to 12-24V power.

Product SKU: SM-ACC-ALRM

sirenmarine