MotorGuide®

8M0121080 1116 eng

Operation
Maintenance
Installation
Warranty
Manual

X3-40/X3-45/X3-55/X3-70

© 2017 Mercury Marine

EU Compliance Statement

Attwood Corporation hereby declares that the MotorGuide X3 trolling motor is in compliance with the essential requirements and other relevant provisions of the 99/5/EC R&TTE directive.

CE Declaration

Manufacturer: **Attwood Corporation**

Address: 1016 N. Monroe

Lowell, MI 49331 USA

Telephone: 616-897-9241

Authorized Representative: **Brunswick Marine**

Parc Industriel de Petit-Rechain

B-4800

Verviers, Belgium

Telephone: +32(0)87323222

Product: **MotorGuide X3 Series**

Model: includes all 12, 24, and 36 ⎓ volt DC models

Council Directive 2004/108/EC - Electromagnetic Compatibility

- **EN 55012:2008; A1:2010** - Vehicles, boats and internal combustion engines.

Council Directive 98/96/EC - Maritime Equipment Directive

- **EN 60945:2002+C1:2008** - Maritime navigation and radiocom. equip. (Motor systems)
  - CISPR16 - Conducted and Radiated Emissions
  - EN61000-4-2:2008 ESD
  - EN61000-4-3:2006 Radiated Immunity
  - EN61000-4-4:2004 EFT
  - EN61000-4-5:2005 Surges
  - EN61000-4-6:2008 Conducted Susceptibility
  - EN61000-4-8:2001 Magnetic Field Immunity
  - EN6100-4-11:2004 Voltage Dips and Interrupts

Council Directive 2006/42/EC - Machinery

- **EN ISO 12100** - Safety of machinery - General principles for design, risk assessment and reduction

An official copy of the Declaration of Conformity can be found at http://www.motorguide.com/support/certifications.

Thank You

Thank you for choosing MotorGuide, one of the finest trolling motors available. Years of experience have been committed to the goal of producing the finest quality products. This led to MotorGuide's reputation for strict quality control, excellence, durability, long-lasting performance and being the best at providing after-the-sale service and support.

Please read this manual carefully before operating your motor. This manual has been prepared to assist you in the operation, safe use, and care of your trolling motor.

Again, thank you for your confidence in MotorGuide.

Warranty Message

The product you have purchased comes with a **Two Year Limited Warranty** from MotorGuide, the terms of the policy are set forth in the **Warranty Information** section of this manual. The policy statement contains a description of the duration of coverage, **important disclaimers and limitations of damages,** and other related information. Please review this important information.

The description and specifications contained herein were in effect at the time this manual was approved for printing. MotorGuide, whose policy is one of continued improvement, reserves the right to discontinue models at any time, to change specifications, designs, methods, or procedures without notice and without incurring obligation.

MotorGuide, Lowell, Michigan U.S.A.

Copyright and Trademark Information

© MERCURY MARINE. All rights reserved. Reproduction in whole or in part without permission is prohibited.

Alpha, Axius, Bravo One, Bravo Two, Bravo Three, Circle M with Waves Logo, K-planes, Mariner, MerCathode, MerCruiser, Mercury, Mercury with Waves Logo, Mercury Marine, Mercury Precision Parts, Mercury Propellers, Mercury Racing, MotorGuide, OptiMax, Quicksilver, SeaCore, Skyhook, SmartCraft, Sport-Jet, Verado, VesselView, Zero Effort, Zeus, #1 On the Water and We're Driven to win are registered trademarks of Brunswick Corporation. Pro XS is a trademark of Brunswick Corporation. Mercury Product Protection is a registered service mark of Brunswick Corporation.

Warranty Information

MotorGuide Limited Two Year Warranty..... 1

General Information

Boater's Responsibilities..... 3
Protecting People in the Water..... 3
Passenger Safety Message..... 3
Safe Boating Suggestions..... 3

Product Overview

X3-40/X3-45/X3-55/X3-70 MotorGuide Trolling Motor..... 5
Specifications..... 6

Wiring and Battery Information

Wiring and Battery Information..... 9
Standard Practices and Procedures..... 9
Battery Recommendations..... 9
Battery Precautions..... 10
Wire and Cable Routing..... 10
Battery Connection..... 11

Trolling Motor Installation and Operation

Mount Bracket Installation..... 14
Permanent Foot Pedal Mounting (Optional)..... 16
Installing the Motor into the Bow Mount..... 17
Removing the Motor from the Bow Mount..... 17
Stowing the Trolling Motor..... 18
Deploying the Trolling Motor..... 19
Adjusting the Steering Tension (Hand-Operated Motors Only)..... 20
Adjusting the Motor Depth..... 21
Directional Indicator—Cable Steer Models..... 23
Speed Control—Cable Steer Models..... 24
Speed Control—Hand-Operated Models..... 25
Battery Indicator Light (Digital Models Only)..... 25

Maintenance

Trolling Motor Care..... 26
Inspection and Maintenance Schedule..... 26
Lubrication Points..... 27
Battery Inspection..... 27
Propeller Replacement..... 28
Adjusting the Steering Cable Tension..... 30
MotorGuide Accessories Inquiries..... 31

Troubleshooting

Trolling Motor Performance..... 32

Owner Service Assistance

Mercury Marine Service Offices..... 34

WARRANTY INFORMATION

MotorGuide Limited Two Year Warranty

KEEP YOUR ORIGINAL PURCHASE RECEIPT

1. To obtain warranty service, the purchaser should deliver or return the unit (postage prepaid and insured) to any MotorGuide authorized service center. DO NOT RETURN TO PLACE OF PURCHASE unless they are an authorized service center. Motors purchased in other countries should be returned to place of purchase. Products returned by mail should be carefully packaged and include a note describing the nature of the problem and/or service requested, customer address, and phone number. A copy of the receipt, Bill of Sale, registration verification, or other proof of purchase is required with the return of the product for warranty consideration. Warranty claims will not be accepted without presentation of purchase receipt for trolling motor, other verification of registration, or Bill of Sale for boat package.
2. MotorGuide electric trolling motors are warranted to the original purchaser to be free from defects in material and/or workmanship for two (2) years. Warranty is NOT transferable to any subsequent purchaser.
3. MotorGuide, at its discretion, will repair or replace items covered under the terms of this warranty. Neither MotorGuide nor MotorGuide service dealers are responsible for damages to MotorGuide products due to repairs performed by anyone other than the MotorGuide Factory Service Center. Neither MotorGuide nor Mercury Marine is responsible for failure or damage caused by improper installation, set-up, preparation, or previous service or repair errors.
4. Warranty coverage is available only to customers that purchase from a dealer authorized by MotorGuide/Mercury Marine to distribute the product in the country in which the sale occurred. Warranty coverage and duration varies by the country in which the product resides. This warranty applies to X3 series MotorGuide trolling motors sold and residing in the United States. This Limited Warranty begins on the date the product is first sold to a purchaser or the date on which the product is first put into service, whichever occurs first. MotorGuide accessories are covered by this Limited Warranty for a coverage period of one (1) year from the date of retail sale. The repair or replacement of parts, or the performance of service under this warranty, does not extend the life of this warranty beyond its original expiration date. Promotional warranties are not included in this statement and coverage may vary by promotion. Product either sold or put into service more than six years from date of manufacture is excluded from warranty coverage.
5. MotorGuide Composite Shaft Limited Lifetime Warranty. MotorGuide composite shafts are warranted to the original retail purchaser to be free of defects in material or workmanship for the lifetime of the original purchaser. MotorGuide will provide a new composite shaft at no cost for any composite shaft which contains a defect in material or workmanship. The installation costs are the sole responsibility of the purchaser.

WARRANTY INFORMATION

6. This warranty does not apply to normal worn parts, i.e., worn cables, adjustments, or product damage due to 1) neglect, lack of maintenance, accident, abnormal operation or improper installation or service; 2) abuse, i.e., bent metal columns, bent armature shafts, broken control cables, etc., accidents, modifications, misuse, excessive wear or damage caused by an owner's failure to provide reasonable and necessary installation or care; 3) use of an accessory or part not manufactured by MotorGuide/ Mercury; 4) alteration or removal of parts; 5) opening the lower unit (motor) by anyone other than the Factory Service Center will void this warranty.
7. This warranty will not apply to haul-out, launch, towing and storage, transportation charges and/or travel time, telephone or rental charges of any type, inconvenience, or loss of time or income, or other consequential damages.
8. We reserve the right to improve the design of any trolling motor without assuming any obligation to modify any trolling motor previously manufactured.
9. Serialized "Service-Repair" motors have a one (1) year warranty. Nonserialized "Service-Repair" electric trolling motors are NOT warranted. "Service-Repair" motor denotes a trolling motor sold by MotorGuide that may be "used," but has been inspected and may have had minor repairs. Original retail purchaser of a "Service-Repair" motor is the first purchaser of the motor after it is denoted as "Service-Repair." "Service-Repair" motors have a blue sticker on the battery cable and box denoting "Manufacturer Certified Service-Repair Motor."
10. TERMINATION OF COVERAGE: Warranty coverage may be terminated for repossessed product, or product purchased at auction, from a salvage yard, from a liquidator, from an insurance company, from unauthorized marine dealers or boatbuilders, or other third party entities.
11. ALL INCIDENTAL AND/OR CONSEQUENTIAL DAMAGES ARE EXCLUDED FROM THIS WARRANTY, WARRANTIES OF MERCHANTABILITY AND FITNESS ARE EXCLUDED FROM THIS WARRANTY, IMPLIED WARRANTIES ARE LIMITED TO THE LIFE OF THIS WARRANTY, SOME STATES DO NOT ALLOW LIMITATIONS ON HOW LONG AN IMPLIED WARRANTY LASTS OR THE EXCLUSION OR LIMITATION OF INCIDENTAL OR CONSEQUENTIAL DAMAGES, SO THE ABOVE LIMITATIONS OR EXCLUSIONS MAY NOT APPLY TO YOU. THIS WARRANTY GIVES YOU SPECIFIC LEGAL RIGHTS, AND YOU MAY ALSO HAVE OTHER LEGAL RIGHTS WHICH MAY VARY FROM STATE TO STATE.

GENERAL INFORMATION

Boater's Responsibilities

The operator (driver) is responsible for the correct and safe operation of the boat and safety of its occupants and general public. It is strongly recommended that each operator (driver) read and understand this entire manual before operating the trolling motor.

Be sure at least one additional person on board is instructed in the basic operation of the trolling motor in case the driver is unable to operate the boat.

Protecting People in the Water

WHILE YOU ARE TROLLING

It is very difficult for a person in the water to take quick action to avoid a boat heading in their direction, even at slow speeds.

Always slow down and exercise extreme caution any time you are boating in an area where there might be people in the water.

WHILE THE BOAT IS STATIONARY

⚠ WARNING

A spinning propeller, a moving boat, or any solid device attached to the boat can cause serious injury or death to swimmers. Stop the trolling motor immediately whenever anyone in the water is near your boat.

Shut off the trolling motor before allowing people to swim or be in the water near your boat.

Passenger Safety Message

Whenever the boat is in motion, observe the location of all passengers. A sudden reduction in boat speed, such as a sharp change of boat direction, could throw them off the boat.

Safe Boating Suggestions

In order to safely enjoy the waterways, familiarize yourself with local and other governmental boating regulations and restrictions, and consider the following suggestions.

Use flotation devices. It is the law to have an approved personal flotation device of suitable size for each person aboard and have it readily accessible.

GENERAL INFORMATION

Do not overload your boat. Most boats are rated and certified for maximum load (weight) capacities, refer to your boat capacity plate. If in doubt, contact your dealer or the boat's manufacturer.

Perform safety checks and required maintenance. Follow a regular schedule and ensure all repairs are made properly.

Never be under the influence of alcohol or drugs while boating (it is the law). Alcohol or drug use impairs your judgment and greatly reduces your ability to react quickly.

Passenger boarding. Stop the trolling motor whenever passengers are boarding or unloading.

Be alert. The operator of the boat is responsible by law to maintain a proper lookout by sight and hearing. The operator must have an unobstructed view particularly to the front. No passengers, load, or fishing seats should block the operators view when operating the boat.

Underwater hazards. Reduce speed and proceed with caution whenever navigating in shallow water.

Tripping hazards. To avoid a trip hazard, route all cables and wiring neatly and out of the way.

Report accidents. Boat operators are required by law to file a Boating Accident Report with their state boating law enforcement agency when their boat is involved in certain boating accidents. A boating accident must be reported if 1) there is loss of life or probable loss of life, 2) there is personal injury requiring medical treatment beyond first aid, 3) there is damage to boats or other property where the damage value exceeds $500.00 or 4) there is complete loss of the boat. Seek further assistance from local law enforcement.

PRODUCT OVERVIEW

X3-40/X3-45/X3-55/X3-70 MotorGuide Trolling Motor

CABLE STEER MODELS

- **a -** Directional indicator
- **b -** Mount bracket
- **c -** Battery cables
- **d -** Latch release handle
- **e -** Speed control
- **f -** Three-position switch
- **g -** Foot pedal
- **h -** Serial number decal (under the foot pedal)
- **i -** Momentary switch
- **j -** Propeller
- **k -** Lower unit
- **l -** Composite column
- **m -** Bracket door knob

PRODUCT OVERVIEW

HAND-OPERATED MODELS

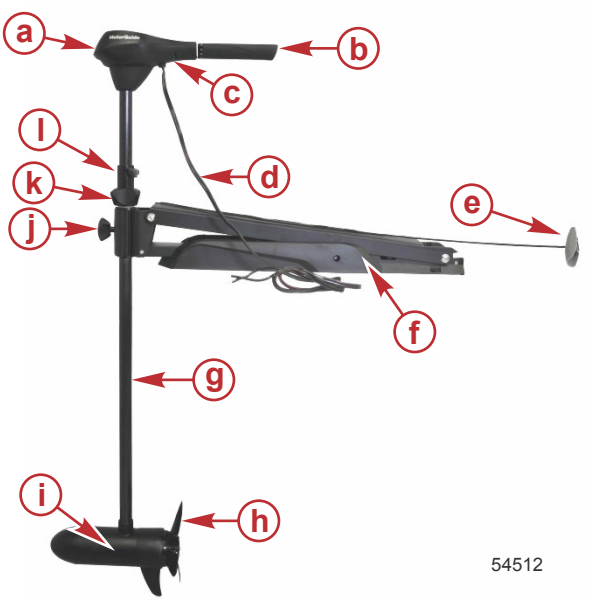

- **a -** Top housing
- **b -** Extendable speed control tiller handle
- **c -** Serial number decal
- **d -** Battery cables
- **e -** Latch release handle
- **f -** Mount bracket
- **g -** Composite column
- **h -** Propeller
- **i -** Lower unit
- **j -** Bracket door knob
- **k -** Steering tension collar
- **l -** Depth adjustment collar

Specifications

Model	Control	Freshwater/ Saltwater	Volts	Speeds Forward/ Reverse	Peak Thrust	Shaft Length
X3-45 FW	Extendable hand/ twist-tiller	Freshwater	12 V	5/2	20.4 kgf (45 lbf)	127.0 cm (50 in.)

PRODUCT OVERVIEW

Model	Control	Freshwater/ Saltwater	Volts	Speeds Forward/ Reverse	Peak Thrust	Shaft Length
X3-55 FW	Extendable hand/ twist-tiller	Freshwater	12 V	5/2	24.9 kgf (55 lbf)	127.0 cm (50 in.)
X3-70 FW	Extendable hand/ twist-tiller	Freshwater	24 V	5/2	31.8 kgf (70 lbf)	127.0 cm (50 in.)
X3-55 FW Digital	Extendable hand/ twist-tiller	Freshwater	12 V	Variable	24.9 kgf (55 lbf)	127.0 cm (50 in.)
X3-55 FW HB Digital	Extendable hand/ twist-tiller	Freshwater	12 V	Variable	24.9 kgf (55 lbf)	127.0 cm (50 in.)
X3-70 FW Digital	Extendable hand/ twist-tiller	Freshwater	24 V	Variable	31.8 kgf (70 lbf)	127.0 cm (50 in.)
X3-55 FW Digital Pontoon	Extendable hand/ twist-tiller	Freshwater	12 V	Variable	24.9 kgf (55 lbf)	127.0 cm (50 in.)
X3-70 FW Digital Pontoon	Extendable hand/ twist-tiller	Freshwater	24 V	Variable	31.8 kgf (70 lbf)	127.0 cm (50 in.)
X3-55 SW HB Digital	Extendable hand/ twist-tiller	Saltwater	12 V	Variable	24.9 kgf (55 lbf)	127.0 cm (50 in.)
X3-70 SW Digital	Extendable hand/ twist-tiller	Saltwater	24 V	Variable	24.9 kgf (55 lbf)	127.0 cm (50 in.)
X3-40 FW	Foot pedal/ cable steer	Freshwater	12 V	5	18.1 kgf (40 lbf)	106.7 cm (42 in.)
X3-45 FW	Foot pedal/ cable steer	Freshwater	12 V	5	20.4 kgf (45 lbf)	91.4 cm (36 in.)
X3-45 FW	Foot pedal/ cable steer	Freshwater	12 V	5	20.4 kgf (45 lbf)	114.3 cm (45 in.)
X3-45 FW	Foot pedal/ cable steer	Freshwater	12 V	5	20.4 kgf (45 lbf)	127.0 cm (50 in.)
X3-55 FW	Foot pedal/ cable steer	Freshwater	12 V	5	24.9 kgf (55 lbf)	91.4 cm (36 in.)

PRODUCT OVERVIEW

Model	Control	Freshwater/ Saltwater	Volts	Speeds Forward/ Reverse	Peak Thrust	Shaft Length
X3-55 FW Digital	Foot pedal/ cable steer	Freshwater	12 V	Variable	24.9 kgf (55 lbf)	91.4 cm (36 in.)
X3-55 FW	Foot pedal/ cable steer	Freshwater	12 V	5	24.9 kgf (55 lbf)	106.7 cm (42 in.)
X3-55 FW	Foot pedal/ cable steer	Freshwater	12 V	5	24.9 kgf (55 lbf)	114.3 cm (45 in.)
X3-55 FW Digital	Foot pedal/ cable steer	Freshwater	12 V	Variable	24.9 kgf (55 lbf)	114.3 cm (45 in.)
X3-55 FW	Foot pedal/ cable steer	Freshwater	12 V	5	24.9 kgf (55 lbf)	127.0 cm (50 in.)
X3-70 FW	Foot pedal/ cable steer	Freshwater	24 V	5	31.8 kgf (70 lbf)	114.3 cm (45 in.)
X3-70 FW Digital	Foot pedal/ cable steer	Freshwater	24 V	Variable	31.8 kgf (70 lbf)	114.3 cm (45 in.)
X3-70 FW	Foot pedal/ cable steer	Freshwater	24 V	5	31.8 kgf (70 lbf)	127.0 cm (50 in.)

WIRING AND BATTERY INFORMATION

Wiring and Battery Information

⚠ WARNING

An operating or charging battery produces gas that can ignite and explode, spraying out sulfuric acid, which can cause severe burns. Ventilate the area around the battery and wear protective equipment when handling or servicing batteries.

⚠ WARNING

Performing service or maintenance without first disconnecting the battery can cause product damage, personal injury, or death due to fire, explosion, electrical shock, or unexpected motor starting. Always disconnect the battery cables from the battery before maintaining, servicing, installing, or removing motor components.

Standard Practices and Procedures

When installing or removing this trolling motor, follow these guidelines:

- Disconnect the trolling motor from the trolling motor battery.
- Do not use the main engine battery to power the trolling motor.

Battery Recommendations

- Use 12-volt, deep cycle marine batteries. The number of batteries required varies according to the model of your trolling motor. Refer to **Battery Connection**.
- As a general rule, deep cycle batteries with a higher amp-hour rating or reserve capacity rating will provide longer run times and better performance.
- Install a manual reset circuit breaker in line with the trolling motor positive leads within 1.8 m (6 ft) of the batteries. These can be purchased from your local MotorGuide retailer or from www.motorguide.com.
- Do not extend the included 10-gauge battery cables more than 1.8 m (6 ft) for a total of 3 m (10 ft). If longer battery cables are required, MotorGuide offers accessory 8 mm² (8-gauge) battery cables.
- Use nylock nuts to secure the battery cables to their terminals. Using wing nuts to secure the battery cables can cause loose connections.
- Do not power any depth sounders or fish finders from the trolling motor battery. Connecting electronic equipment to the trolling motor batteries can cause electrical interference. Any depth sounders or fish finders must be powered from the engine starting or accessory battery.

Recommended MotorGuide Accessory Description
8-gauge battery cable and terminals with 50-amp manual reset circuit breaker
50-amp manual reset circuit breaker

WIRING AND BATTERY INFORMATION

Recommended MotorGuide Accessory Description
60-amp manual reset circuit breaker

Battery Precautions

⚠ WARNING

An operating or charging battery produces gas that can ignite and explode, spraying out sulfuric acid, which can cause severe burns. Ventilate the area around the battery and wear protective equipment when handling or servicing batteries.

When charging batteries, an explosive gas mixture forms in each cell. Part of this gas escapes through holes in the vent plugs and may form an explosive atmosphere around the battery if ventilation is poor. This explosive gas may remain in or around the battery for several hours after it has been charged. Sparks or flames can ignite this gas and cause an internal explosion, which may shatter the battery.

The following precautions should be observed to prevent an explosion:

1. Do not smoke near batteries being charged or which have been charged very recently.
2. Do not break live circuits at terminals of batteries, because a spark usually occurs at the point where a live circuit is broken. Always be careful when connecting or disconnecting cable clamps on chargers. Poor connections are a common cause of electrical arcs which cause explosions.
3. Do not reverse polarity of battery terminal to cable connections.

Wire and Cable Routing

- Route the trolling motor wires on the opposite side of the boat from other boat wiring.
- The trolling motor should be connected to its own dedicated battery.
- Sensitive electronics, such as depth finders, should be connected to a separate battery.
- Marine engines should have their own dedicated starting battery.
- All batteries should have a common ground.

WIRING AND BATTERY INFORMATION

Battery Connection

⚠ WARNING

Before working around electrical system components, disconnect the battery cables from the battery to prevent injury or damage to the electrical system due to an accidental short circuit.

⚠ CAUTION

Disconnecting or connecting the battery cables in the incorrect order can cause injury from electrical shock or can damage the electrical system. Always disconnect the negative (-) battery cable first and connect it last.

NOTICE

Failure to operate the trolling motor within the recommended voltage specifications can cause product damage. Do not exceed the maximum supply voltage.

IMPORTANT: Refer to the decal on the head of the trolling motor to determine the voltage requirements of your trolling motor.

12-VOLT BATTERY CONNECTION

1. Starting with the negative (–) lead, disconnect the battery cables from the engine starting or accessory battery.
2. Install a 50-amp (good) or 60-amp (best) manual reset circuit breaker in line with the trolling motor power cable positive (+) lead and the trolling motor battery positive (+) terminal.
3. Connect the positive (+) trolling motor lead to the positive (+) trolling motor battery terminal.
4. Connect the negative (–) trolling motor lead to the negative (–) trolling motor battery terminal.
5. Connect a common ground bond from the trolling motor battery negative (–) terminal to the engine starting battery negative (–) terminal.

6. Starting with the positive (+) lead, reconnect the battery cables to the engine starting or accessory battery.

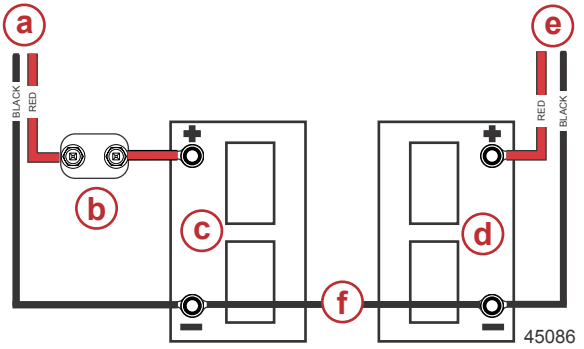

- **a -** Power cables to trolling motor
- **b -** Manual reset circuit breaker
- **c -** Trolling motor battery
- **d -** Engine starting or accessory battery
- **e -** Power cables to engine
- **f -** Common ground bond

24-VOLT BATTERY CONNECTION

1. Starting with the negative (–) lead, disconnect the battery cables from the engine starting or accessory battery.
2. Install a 50-amp (good) or 60-amp (best) manual reset circuit breaker in line with the trolling motor power cable positive (+) lead and the trolling motor battery **B** positive (+) terminal.
3. Connect the positive (+) trolling motor lead to the positive (+) terminal on trolling motor battery **B**.
4. Connect a jumper wire (reference gray) between the negative (–) terminal on battery **B** to the positive (+) terminal on battery **A**.

IMPORTANT: The jumper wire should be the same wire gauge as the negative (–) and positive (+) power cables.

5. Connect the trolling motor negative (–) lead to the negative (–) terminal on battery **A**.

6. Starting with the positive (+) lead, reconnect the battery cables to the engine starting or accessory battery.

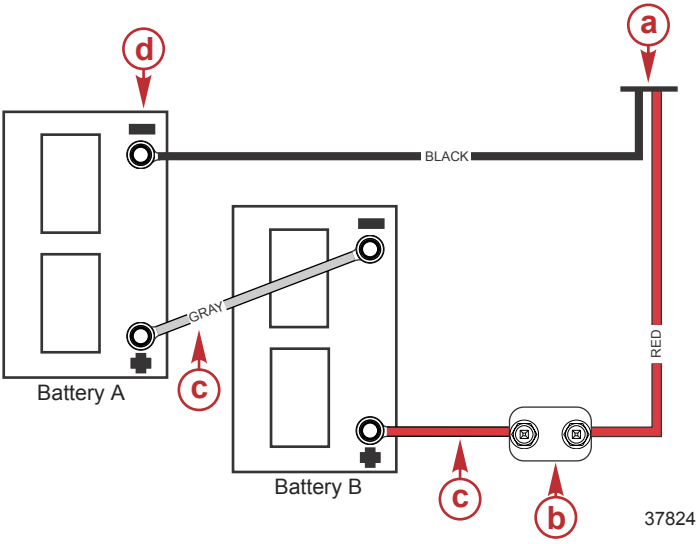

a - Power cables to trolling motor
b - Manual reset circuit breaker
c - Jumper wire (not supplied)
d - Negative (–) battery terminal

TROLLING MOTOR INSTALLATION AND OPERATION

Mount Bracket Installation

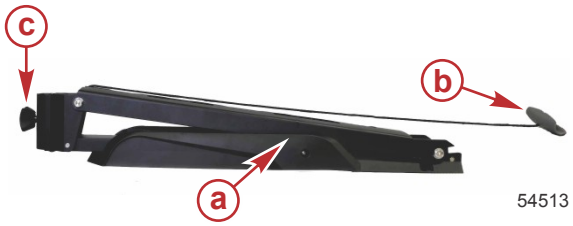

a - X3 bow mount bracket
b - Latch release handle
c - Bracket door knob

1. Select an appropriate area on the deck of the boat to install the mount. Ensure that the forward mounting screws will not penetrate the hull.

IMPORTANT: Choose an area on the boat deck that allows a 7.6 cm (3 in.) clearance between the bow of the boat and the column of the trolling motor.

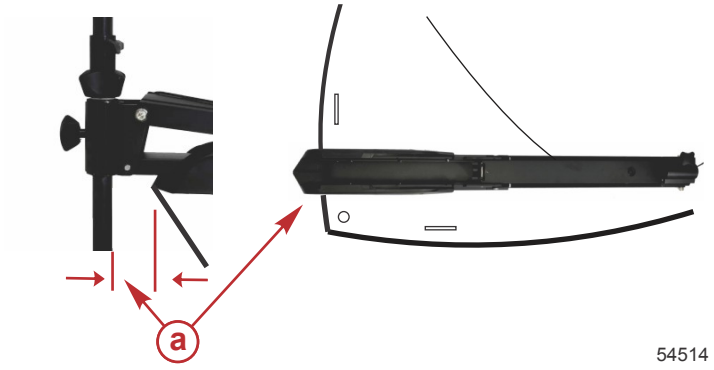

a - Clearance 7.6 cm (3.0 in.)

2. Place the bow mount base on the surface of the boat deck. Use the mount base as a template to mark the locations of the front mounting holes and the rear mounting holes on the mount base.

IMPORTANT: A minimum of four mounting bolts are required to mount the trolling motor to the boat. Spread the mounting bolts as far apart as practical for the most secure mounting.

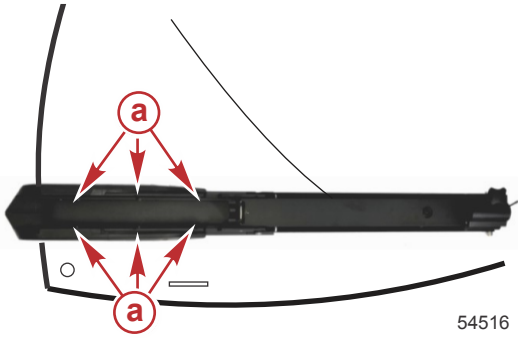

a - Mount bracket mounting holes

3. Drill the mounting holes with a 7 mm (1/4 in.) diameter drill bit. Remove any debris.

IMPORTANT: Using a larger drill bit, countersink the holes on fiberglass boats to prevent cracking.

4. Insert the rubber isolators between the base of the mount and the boat mounting surface. Place the tie-down strap under the mount bracket, hook-and-loop side down, with the buckle facing toward the outside of the boat.

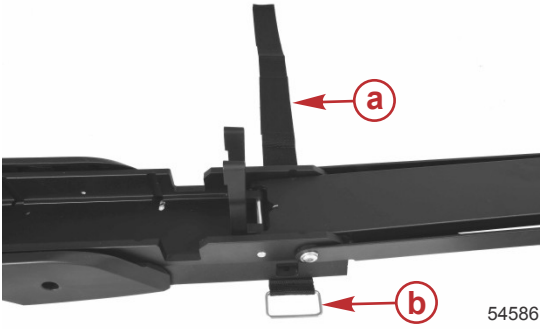

a - Velcro tie-down strap
b - Buckle

5. Install the stainless steel washers and nylon locking nuts onto the mounting bolts underneath the boat deck. Tighten them securely with (7/16 in.) wrenches.

IMPORTANT: If necessary, shim the rubber washers with 25 mm (1 in.) outside diameter stainless steel washers to create a level mounting surface.

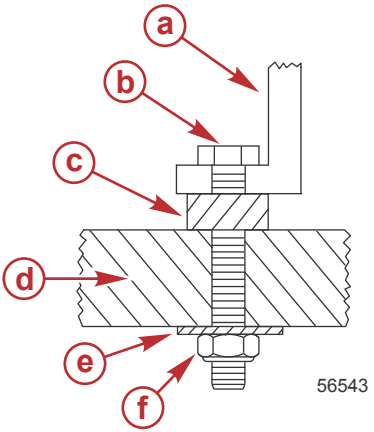

a - Mount bracket
b - Mounting bolt
c - Rubber isolator
d - Deck
e - Washer
f - Nylon locking nut

6. Once installed, the bracket should fasten securely and evenly, with the latch pins in the slots, and release with a light, easy pull on the rope handle.

Permanent Foot Pedal Mounting (Optional)

1. Determine a suitable location for the foot pedal with the trolling motor deployed and in the stowed position. Ensure that there are no obstructions beneath the boat deck that would interfere with the mounting screws, such as bulkheads or boat wiring.
2. Once a suitable location is chosen, mark the mounting holes, using the foot pedal as a template.
3. Use a 3 mm (7/64 in.) drill bit to drill holes through the boat deck.

4. Use four #8 x 2 in. stainless steel screws to secure the foot pedal to the boat deck.

Installing the Motor into the Bow Mount

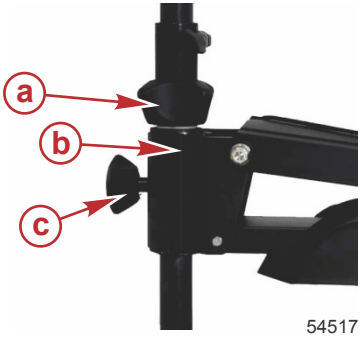

a - Steering tension collar (hand-operated models only)
b - Bracket door
c - Bracket door knob

1. Turn the bracket door knob counterclockwise to loosen and open the bracket door.
2. Place the motor column into the bracket and close the door.
3. Turn the bracket door knob clockwise to tighten the motor column in the bracket.

Removing the Motor from the Bow Mount

1. Turn the bracket door knob counterclockwise to loosen and open the bracket door.
2. Remove the motor column from the bracket and close the door.

Stowing the Trolling Motor

⚠ WARNING

Rotating propellers can cause serious injury or death. Never start or operate the motor out of water.

⚠ CAUTION

Moving parts, such as hinges and pivot points, can cause serious injury. Keep away from moving parts when stowing, deploying, or tilting the motor.

1. Firmly grasp the latch release handle.
2. Snap the latch release handle to disengage the lock pin.
3. Continue to pull the latch release handle to raise the lower unit onto the mount.

NOTE: *Hand-operated trolling motor shown in the illustration below.*

a - Latch release handle

IMPORTANT: Gently raise the trolling motor out of the water. Do not release the latch release handle until the lock pin is engaged.

4. Once the motor is in the stowed position, the lock pin engages to secure the trolling motor.

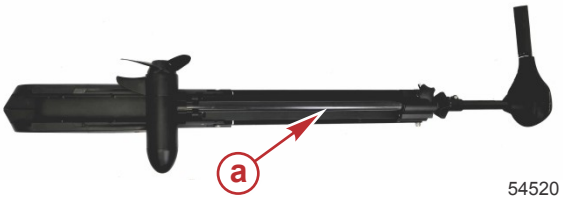

a - X3 in the stowed position

5. Position the tie-down strap over the composite column and through the buckle. Pull it tight, then secure the hook-and-loop backing together to secure the motor to the mount bracket.

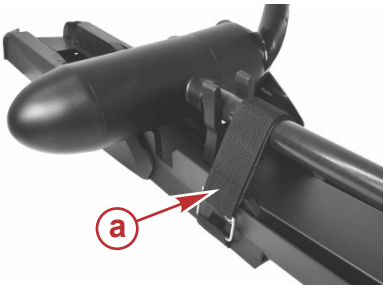

a - Tie-down strap

Deploying the Trolling Motor

⚠ WARNING

Rotating propellers can cause serious injury or death. Never start or operate the motor out of water.

⚠ CAUTION

Moving parts, such as hinges and pivot points, can cause serious injury. Keep away from moving parts when stowing, deploying, or tilting the motor.

⚠ CAUTION

Avoid possible serious injury from the motor dropping suddenly when adjusting the motor depth. Firmly grasp the motor shaft with one hand when raising or lowering the motor.

1. Remove the tie-down strap securing the trolling motor to the mount bracket.
2. Firmly grasp the latch release handle.

3. Snap the latch release handle to disengage the lock pin.
4. Continue to maintain tension on the latch release handle while lowering the trolling motor into the water.

IMPORTANT: Gently lower the trolling motor into the water. Do not release the latch release handle until the lock pin is engaged.

a - Latch release handle

5. Once the motor is in the deployed position, the lock pin will engage to secure the trolling motor.

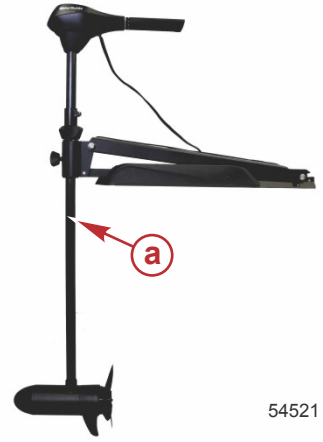

a - X3 in the deployed position

Adjusting the Steering Tension (Hand-Operated Motors Only)

Adjust the steering tension collar to increase or decrease the effort to turn the motor freely.

1. To increase the steering tension, turn the steering tension collar clockwise.

2. To reduce the steering tension, turn the steering tension collar counterclockwise.

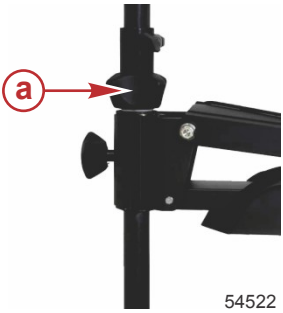

a - Steering tension collar

Adjusting the Motor Depth

⚠ CAUTION

Avoid possible serious injury from dropping the motor when adjusting the motor depth. Firmly grasp the motor shaft with one hand when raising or lowering the motor.

HAND-OPERATED MODELS

Adjust the depth of the motor to improve trolling motor performance in various water depths.

IMPORTANT: When adjusting the motor depth, ensure that the propeller blades are fully submerged 15–30 cm (6–12 in.) below the water surface to avoid ventilation.

1. Firmly grasp the column with one hand while holding the depth adjustment collar.
2. Loosen the depth adjustment collar until the motor column slides freely.
3. Raise or lower the motor column until the propeller blades are submerged 15–30 cm (6–12 in.) below the water surface, then tighten the collar.

a - Depth adjustment collar

CABLE STEER MODELS

IMPORTANT: When adjusting the motor depth, ensure that the propeller blades are fully submerged 15–30 cm (6–12 in.) below the water surface to avoid ventilation.

1. Firmly grasp the column with one hand.
2. Loosen the bracket door knob until the motor column slides freely.
3. Raise or lower the motor column until the propeller blades are submerged 15–30 cm (6–12 in.) below the water surface, then tighten the collar.

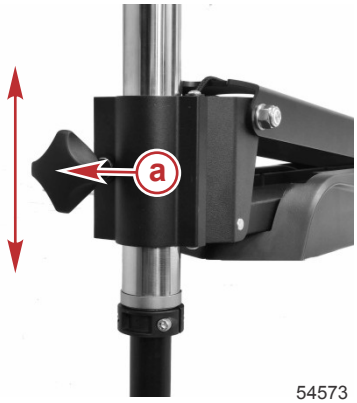

a - Bracket door knob

Directional Indicator—Cable Steer Models

The indicator provides directional information at a glance.

- **a -** Directional indicator
- **b -** Right turn - toe down; motor steers boat to right (continue to press all the way down for reverse)
- **c -** Straight ahead - foot pedal in middle
- **d -** Left turn - heel down; motor steers boat to left (continue to press all the way down for reverse)

Speed Control—Cable Steer Models

FIVE-SPEED AND DIGITAL VARIABLE SPEED MOTORS

Foot operated motors are available as five-speed models or with digital variable speed control. Control the speed of your motor by rolling the speed control knob with your hand or foot until you reach the desired speed.

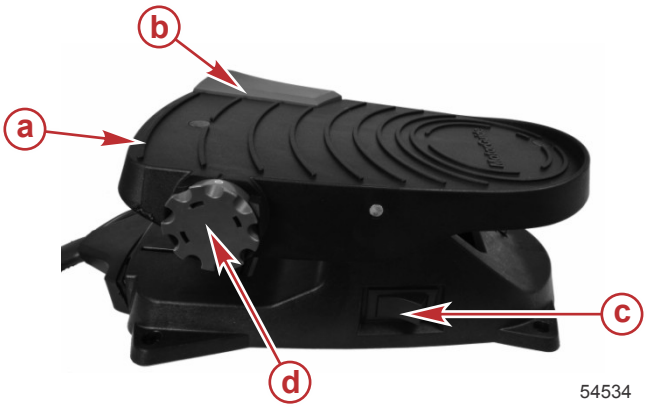

a - Foot pedal
b - Momentary switch
c - On/off/pedal switch
d - Speed control knob

- **Speed control knob:** The speed control knob on a five-speed motor is numbered 0–5, and allows you to select one of five preset speeds, and stop the motor. Digital variable speed motor control knobs are numbered 0–10, and allows you to select any speed from 0–10, and stop the motor.
- **Momentary switch:** The momentary switch is located on the top right corner of the foot pedal. The momentary switch works in conjunction with the on/off/pedal switch when it is in the pedal position. When the momentary switch is pressed, the motor will run at the selected speed as long as the switch is pressed.
- **On/off/pedal switch:** This three-position switch provides three options for operating the motor: on, pedal, or off.
  a. **On:** Allows the motor to run continuously at the speed selected by the speed control knob, without the use of the momentary switch.
  b. **Pedal:** Allows the motor to activate with the momentary switch at the speed selected by the speed control knob.
  c. **Off:** Turns the trolling motor off.

Speed Control—Hand-Operated Models

Adjust the speed control to the desired direction and thrust level. Rotate the twist-tiller handle clockwise for forward movement or counterclockwise for reverse movement. The "off" handle position stops the motor.

Five-speed models have five forward speed settings and two reverse speed settings.

Digital variable speed models allow you to select any speed from 0–10 in forward or reverse.

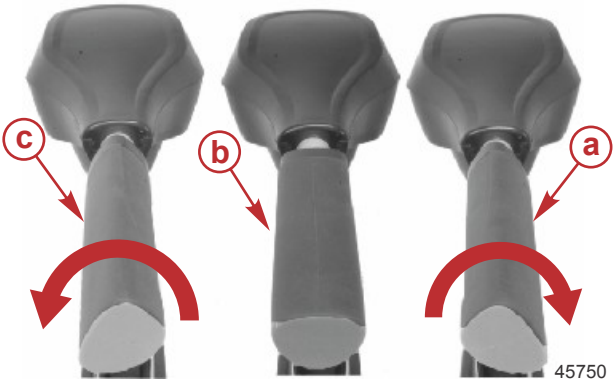

a - Forward speed control
b - Off
c - Reverse speed control

Battery Indicator Light (Digital Models Only)

The battery indicator light (located on the head cover) provides battery state-of-charge information at a glance. The battery light will turn on when the trolling motor is connected to the battery, and will remain on the entire time that the motor is connected to the battery. Depending on the battery state-of-charge, the light will either be green (charged) or red (discharged).

MAINTENANCE

Trolling Motor Care

To keep your trolling motor in the best operating condition and retain its dependability, it is important that your trolling motor receive periodic inspections and maintenance. We urge you to keep it maintained properly to ensure the safety of you and your passengers.

⚠ WARNING

Neglecting to inspect, maintain, or repair your trolling motor can result in product damage or serious injury or death. Do not perform maintenance or service on your trolling motor if you are not familiar with the correct service and safety procedures.

SELECTING REPLACEMENT PARTS

We recommend using original MotorGuide Certified Tough replacement parts.

Inspection and Maintenance Schedule

BEFORE EACH USE

- Check the trolling motor for tightness on the deck mount.
- Check the tightness of the battery lead connections.
- Visually inspect for loose or corroded wiring connections.
- Check the tightness of the propeller nut.
- Check the propeller blades for damage.

AFTER EACH USE

- Disconnect the battery cables from the power source.
- Check the propeller and the propeller shaft for debris such as weeds and fishing line. Remove all debris.
- Rinse the trolling motor with clean water to remove dirt and dust that may scratch the surface.

EVERY 100 HOURS OF USE OR ANNUALLY

- Periodically lubricate all the pivot points. Refer to **Lubrication Points**.
- Check the tightness of bolts, nuts, and other fasteners.
- Inspect the battery. Refer to **Battery Inspection**.

STORAGE PREPARATION

The major consideration in preparing the trolling motor for storage is to protect it from corrosion and damage caused by freezing of trapped water.

Complete the appropriate care instructions to prepare the trolling motor for storage. Store the trolling motor in a dry location where it will not be affected by temperatures below -29 °C (-20 °F).

IMPORTANT: Trolling motors stored in temperatures below 0 °C (32 °F) should be operated slowly for a minimum of 15 minutes before going above 30% operation.

Lubrication Points

NOTE: *Preferred lubricants can be obtained at any authorized MotorGuide or Mercury Marine service center.*

To reduce friction and quiet squeaks, lubricate the specified locations periodically with the following lubricants:

- Bracket door knob threads - 2-4-C with PTFE
- Latch pin hooks - 2-4-C with PTFE
- Latch pins - 2-4-C with PTFE
- Pivot pins - 4-Stroke 10W-30 Outboard Oil

IMPORTANT: Never use an aerosol lubricant to grease or oil any part of the unit. Many aerosol lubricants contain harmful propellants that can cause damage to various parts of the trolling motor.

IMPORTANT: Do not allow any lubricant to contact the column sleeves in the door bracket halves as trolling motor steering tension will be affected.

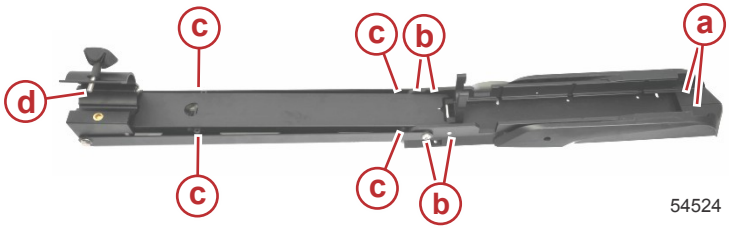

a - Latch pin hooks
b - Pivot pins
c - Bracket door knob threads
d - Latch pins

Tube Ref No.	Description	Where Used	Part No.
95	2-4-C with PTFE	Latch pins, latch pin hooks, and bracket door knob threads	92-802859A 1
110	4-Stroke 10W-30 Outboard Oil	Pivot pins	92-8M0078625

Battery Inspection

The battery should be inspected at periodic intervals to ensure proper trolling motor operation.

MAINTENANCE

IMPORTANT: Read the safety and maintenance instructions which accompany your battery.

1. Ensure that the battery is secured to the vessel.
2. Ensure that the battery cable terminals are clean, tight, and correctly installed. For installation instructions, refer to **Battery Connection**.
3. Ensure that the battery is equipped with a battery box to prevent accidental shorting of the battery terminals.

Propeller Replacement

⚠ WARNING

Performing service or maintenance without first disconnecting the battery can cause product damage, personal injury, or death due to fire, explosion, electrical shock, or unexpected motor starting. Always disconnect the battery cables from the battery before maintaining, servicing, installing, or removing motor components.

REMOVING THE PROPELLER

1. Disconnect the power cables from the battery.
2. While holding the propeller blade with one gloved hand, use a 9/16 in. wrench or a ratchet and a 9/16 in. socket to remove the propeller nut. Remove the propeller nut and washer (or anode, for saltwater models).

IMPORTANT: Remove the propeller nut with a wrench or a ratchet and socket. Using another tool may damage the propeller nut or shaft. If the propeller cannot be removed easily, use a rubber mallet to lightly tap the back side of the opposite blade. If the propeller cannot be removed, have the propeller removed by an authorized dealer.

NOTE: *If the propeller pin is bent, replace the propeller pin.*

53442

44663

INSTALLING THE PROPELLER

1. Rotate the motor shaft to insert the propeller pin horizontally.

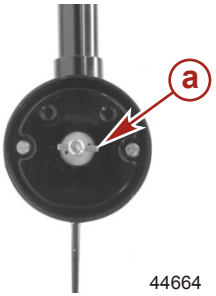

44664

a - Propeller pin

2. Install the propeller onto the motor shaft by engaging the propeller onto the propeller pin.

44663

3. Install the washer (or anode, for saltwater models) onto the propeller shaft then install the propeller nut. Tighten the propeller nut securely.

4. Tighten the propeller nut another ¼ turn.

Adjusting the Steering Cable Tension

⚠ WARNING

Neglecting to inspect, maintain, or repair your trolling motor can result in product damage or serious injury or death. Do not perform maintenance or service on your trolling motor if you are not familiar with the correct service and safety procedures.

The cable tension on the X3 trolling motor is preset at the factory. With time and use, the cables may stretch slightly, requiring occasional adjustment. The following procedure explains how to adjust the steering cable tension.

Use care while adjusting the steering cable tension. Excessive cable tension will cause premature wear to the cables and pulleys, while excessively loose tension may cause the cables to jump off of the pulleys, resulting in a loss of steering control.

1. Remove the foot pedal from the boat deck if it has been secured with screws.
2. Adjust the cable tension by turning the cable tension screw clockwise to increase tension, and counterclockwise to decrease tension. Adjust the cable tension screw to the specified torque value.

Description	Nm	lb-in.	lb-ft
Cable tension screw	1.7	15	–

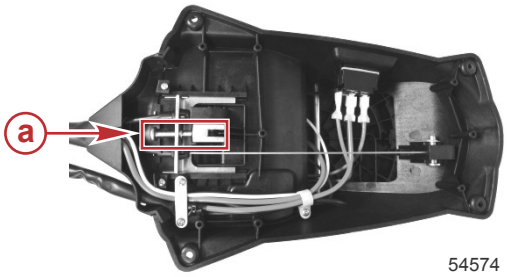

Bottom of foot pedal

a - Cable tension screw

MotorGuide Accessories Inquiries

Refer to www.motorguide.com for factory authorized accessories for all MotorGuide trolling motors.

TROUBLESHOOTING

Trolling Motor Performance

Symptom	Possible Cause	Resolution
Loss of power	Weak battery	Refer to **Wiring and Battery Information**.
	Loose or corroded battery connections	
	Propeller is loose, damaged, or off-balance	Refer to **Maintenance**.
	Wiring or electrical connection faulty	Wire gauge from the battery to the trolling motor is insufficient. Six-gauge wire (13 mm²) is recommended.
	Weeds, fishing line, or debris wrapped around propeller	Remove weeds, fishing line, or debris from propeller.
Excessive noise, vibration	Motor shaft is bent	Refer to **Warranty Information**.
	Propeller is loose, damaged, or off-balance	Refer to **Maintenance**.
Motor failure (all speeds)	Weak battery	Refer to **Wiring and Battery Information**.
	Loose or corroded battery connections	
	Electrical	Check the connector for a loose or damaged connection. Refer to **Wiring and Battery Information**.
	Fuse or circuit breaker is open	Locate and correct the cause of the overload. Then replace the fuse or reset the circuit breaker.
Motor failure (one or more speeds)	Propeller is loose, damaged, or off-balance	Refer to **Maintenance**.
	Wiring or electrical connection faulty.	Refer to **Warranty Information**.
Difficulty removing propeller	Bent propeller pin	Hold one blade and lightly tap the opposite blade with a rubber mallet.
		Use a putty knife on both sides of the propeller to apply equal pressure.
	Bent armature shaft	Refer to service center.

TROUBLESHOOTING

Symptom	Possible Cause	Resolution
Mount bracket squeaks	Lock pins need lubrication	Lubricate the lock pins on the mount bracket with 2-4-C with PTFE.

OWNER SERVICE ASSISTANCE

Mercury Marine Service Offices

For assistance, call, fax, or write. Please include your daytime telephone number with mail and fax correspondence.

United States, Canada		
Telephone	English +1 920 929 5040 Français + 905 636 4751	Mercury Marine W6250 Pioneer Road P.O. Box 1939 Fond du Lac, WI 54936-1939
Fax	English +1 920 929 5893 Français +1 905 636 1704	
Website	www.mercurymarine.com	

Australia, Pacific		
Telephone	+61 3 9791 5822	Brunswick Asia Pacific Group 41–71 Bessemer Drive Dandenong South, Victoria 3175 Australia
Fax	+61 3 9706 7228	

Europe, Middle East, Africa		
Telephone	+32 87 32 32 11	Brunswick Marine Europe Parc Industriel de Petit-Rechain B-4800 Verviers, Belgium
Fax	+32 87 31 19 65	

Mexico, Central America, South America, Caribbean		
Telephone	+1 954 744 3500	Mercury Marine 11650 Interchange Circle North Miramar, FL 33025 U.S.A.
Fax	+1 954 744 3535	

Asia, Singapore, Japan		
Telephone	+65 65466160	Brunswick Asia Pacific Group T/A Mercury Marine Singapore Pte Ltd 29 Loyang Drive Singapore, 508944
Fax	+65 65467789	