REVISIONS			
REV	DESCRIPTION	DATE	APPROVED
1	DELETED SHRINK TUBING	9/6/02	2002420
2	CHANGED FROM BRASS TO TIN PLATED PARTS	1/19/04	2004013

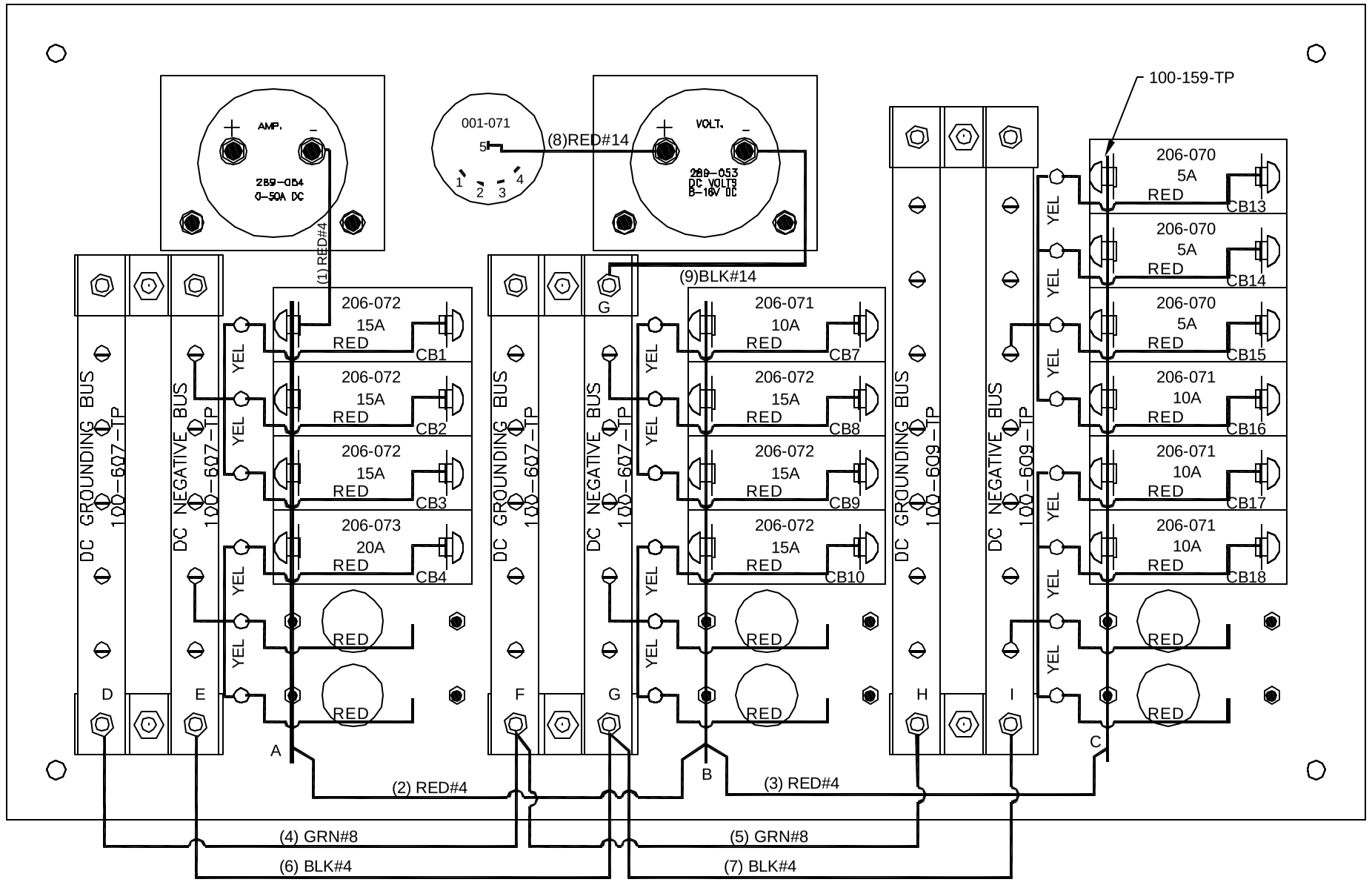

EXCLUSIVE PROPERTY OF PANELTRONICS, INC. NOT FOR RELEASE WITHOUT PROPER WRITTEN AUTHORIZATION THIS DOCUMENT DISCLOSES INFORMATION WHICH PANELTRONICS INCORPORATED HAS PROPRIETARY RIGHTS

Notes:

PANELTRONICS INCORPORATED

Paneltronics, Inc.
11960 N.W. 87th Court
Hialeah Gardens, FL 33018

REAR VIEW
12V DC 20 POSITIONS

CATALOGUE PANEL

Drawn By: NA	Date: 11/09/2000					
Revised By: TG	Date: 9/6/02					
Series/Model: CAT	Item:	Sheet: 2 of 2	Scale: 1:1	Size: C	DWG/Part #: 9973210	Rev: 2