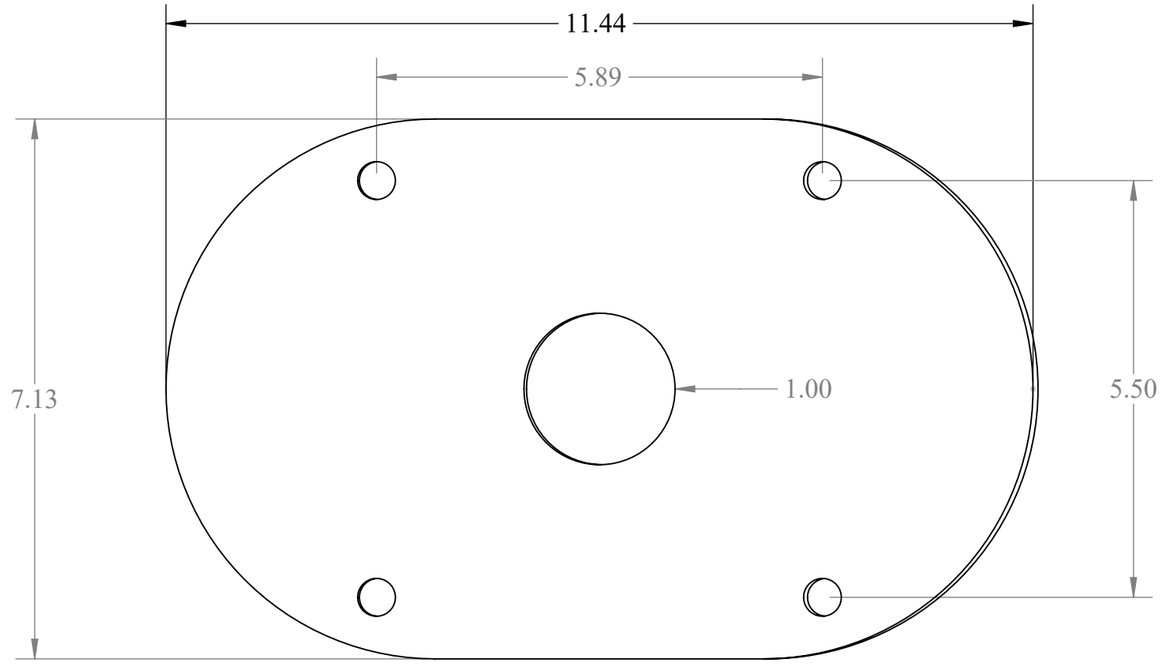

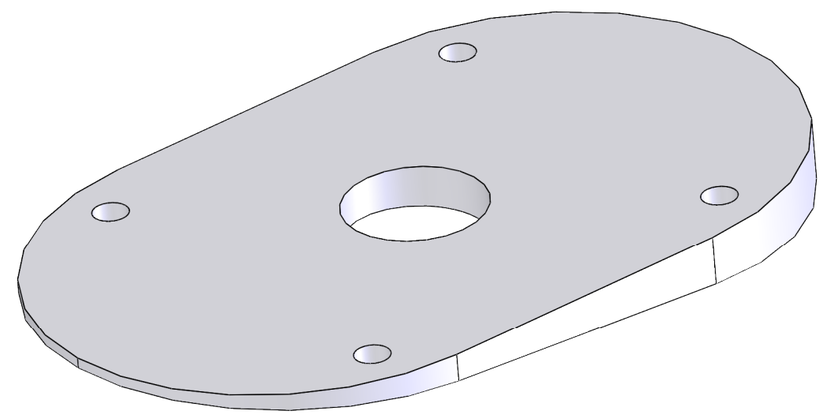

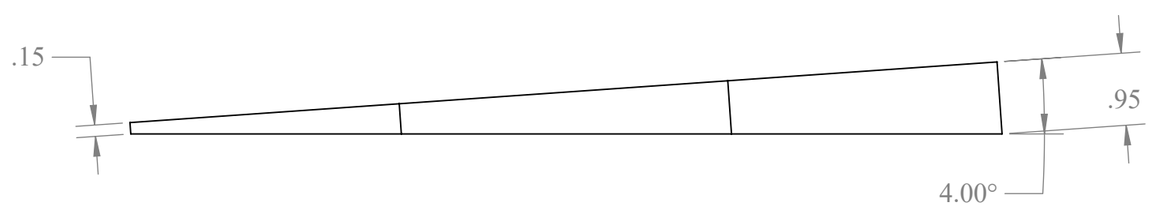

RW4-4

For help e-mail
info@seaviewglobal.com
ph. 1-800-655-7922