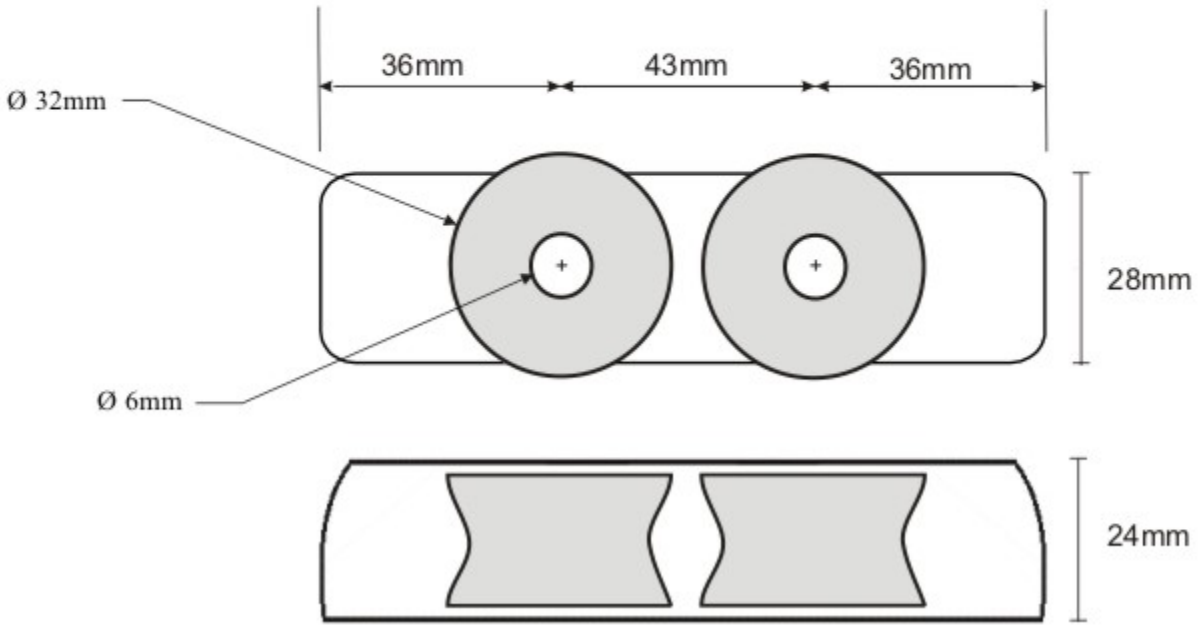Part Number 81582