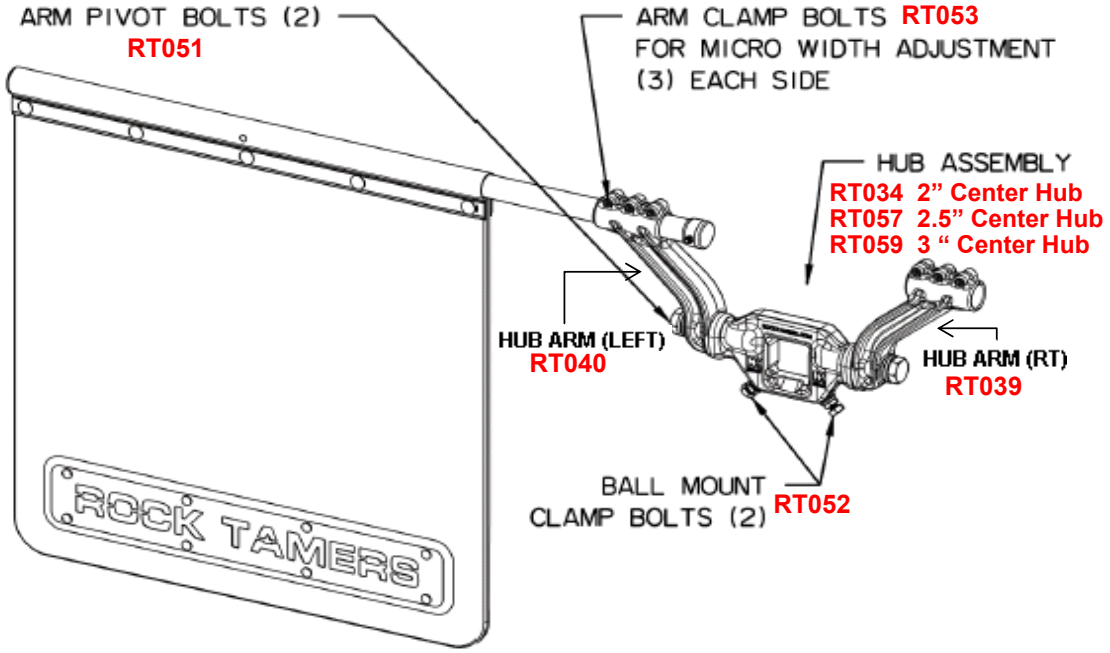
ARM PIVOT BOLTS (2)
RT051
ARM CLAMP BOLTS RT053
FOR MICRO WIDTH ADJUSTMENT
(3) EACH SIDE
HUB ASSEMBLY
RT034 2" Center Hub
RT057 2.5" Center Hub
RT059 3 " Center Hub
HUB ARM (LEFT)
RT040
HUB ARM (RT)
RT039
BALL MOUNT
CLAMP BOLTS (2) RT052
ROCK TAMERS

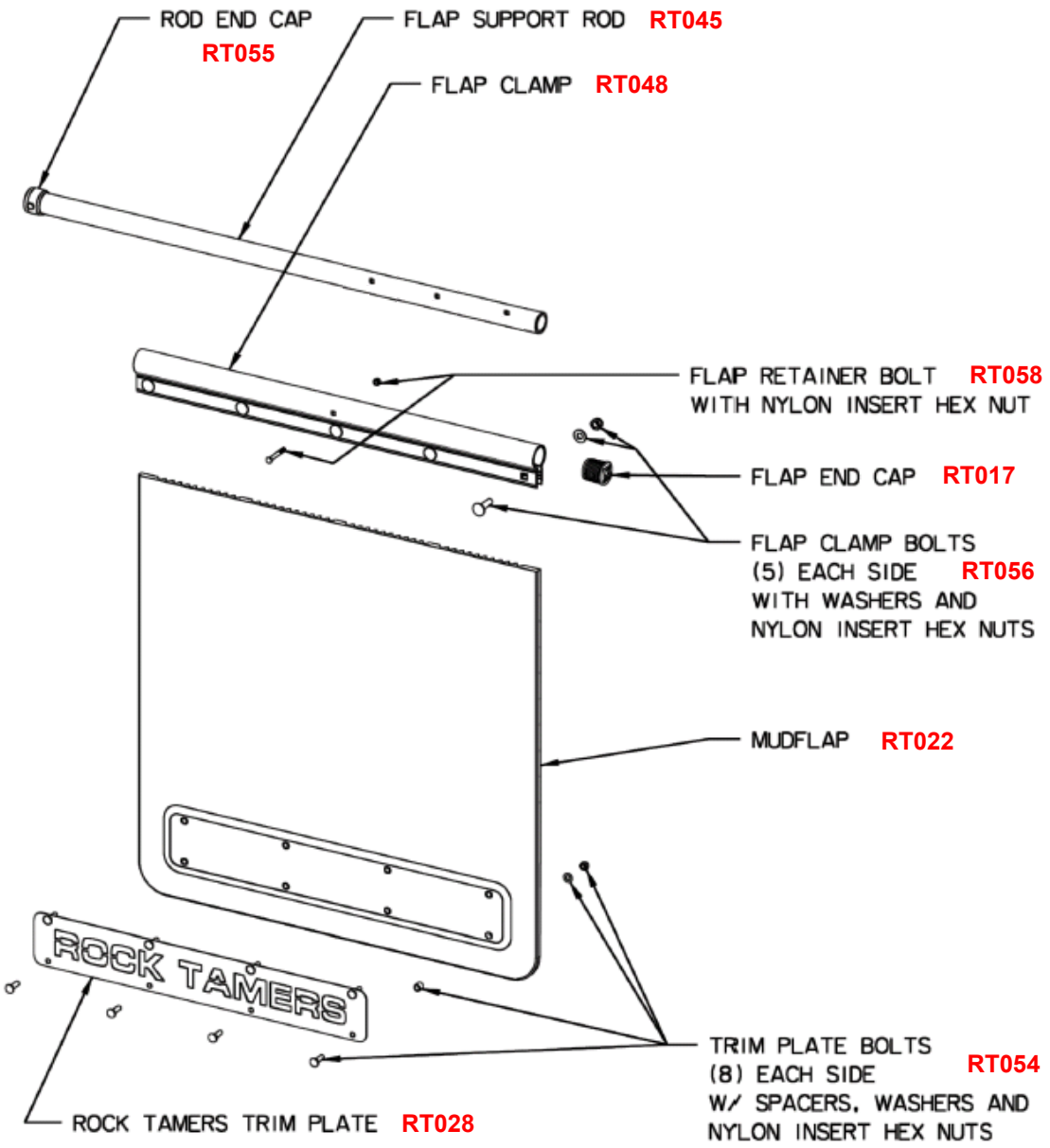
ROD END CAP
RT055
FLAP SUPPORT ROD RT045
FLAP CLAMP RT048
FLAP RETAINER BOLT RT058
WITH NYLON INSERT HEX NUT
FLAP END CAP RT017
FLAP CLAMP BOLTS
(5) EACH SIDE RT056
WITH WASHERS AND
NYLON INSERT HEX NUTS
MUDFLAP RT022
ROCK TAMERS
TRIM PLATE BOLTS
(8) EACH SIDE RT054
W/ SPACERS, WASHERS AND
NYLON INSERT HEX NUTS
ROCK TAMERS TRIM PLATE RT028